DART AEROSPACE APICAL INDUSTRIES, INC. dba DART AEROSPACE	ENGINEERING CHANGE NOTICE NO. 05345				SHEET 1 OF 1
	DWG NO. 646.9700	REV: D	PREPARED BY J. GARDINER	DATE: 03/15/16	EFFECT ON DWG ☐ INC. ☒ UNINC.
	DWG TITLE: CUTTER SUB ASSY				
	APPROVED BY: ENGR.	MFG	QC		EFF. CURRENT ORDER
TRANSACTION CODES (TC): A-ADD C-CREATE R-REVISE D-DELETE	REASON: REVISED NOTES				ECR: N/A
					ACTION ITEM: 1.

SHEET 1, ZONE A6 IS:

NOTES:

IS

1. MATERIAL: ALUMINUM 7075-T651 PER AMS-QQ-A-250/12
2. FINISH IAW MPP-172 SECTION 2.1, 3.3 & 4.3.
3. MATERIAL: AISI A2 TOOL STEEL
   CONDITION: ANNEALED
   POST PROCESS: HEAT TREAT TO 58-62 Rc ROCKWELL HARDNESS
4. FINISH: PRIME IAW MPP-172 SECTION 3.3; 1-2 MIL MAX
5. DEBURR AND BREAK ALL SHARP EDGES EXCEPT WHERE OTHERWISE NOTED
6. IDENTIFY IAW MPP-120
7. APPLY F/N 5 AS REQUIRED TO ALL FAYING SURFACES OF F/N 2 UPON ASSEMBLY
8. CUTTING EDGE INTENDED TO BE SHARP, DO NOT BREAK SHARP EDGE
9. ALL DIMENSIONS NOT SPECIFIED ARE CONTROLLED BY 646.9710.

Superceded

SHEET 7, ZONE C5 IS:

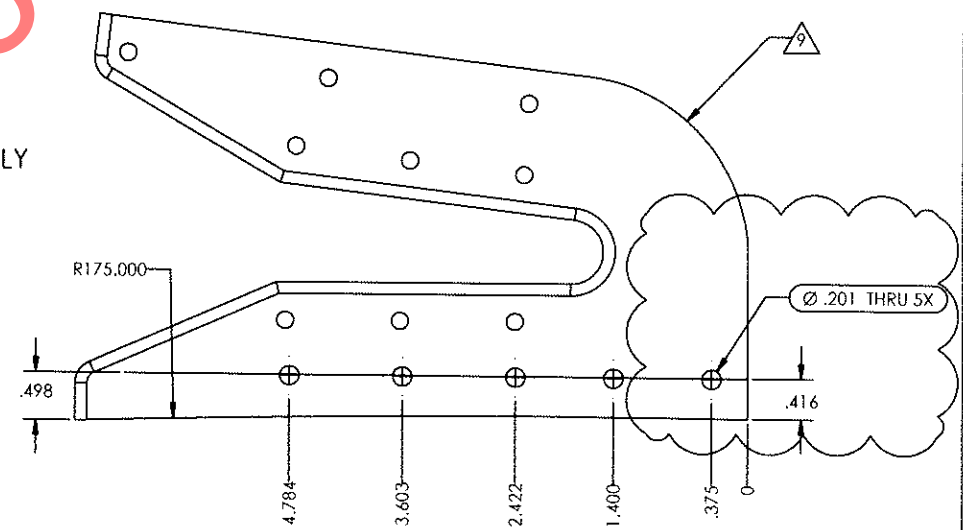

DOCUMENTS EFFECTED: ☐ PATTERN ☐ MDL ☐ INSTALL INSTRUCTIONS ☐ ICA ☐ FMS ☐ BOM	CHANGE CATEGORY ☐ MAJOR ☒ MINOR	DER REVIEW REQUIRED ☐ YES ☒ NO	

THE INFORMATION CONTAINED IN THIS DRAWING IS THE SOLE PROPERTY OF APICAL INDUSTRIES DBA DART AEROSPACE. ANY REPRODUCTION IN PART OR WHOLE WITHOUT THE WRITTEN PERMISSION OF APICAL INDUSTRIES DBA DART AEROSPACE IS PROHIBITED.

REVISIONS

REV.	DESCRIPTION	DATE	APPROVED
	LAST PROTOTYPE REVISION : PR2		N/C
NC	INITIAL RELEASE	03/29/09	P. BRAVO
A	INCORPORATED ECN 02744, 03838, 03912	06/06/13	P. BRAVO
B	INCORPORATED ECN 03967	07/03/13	P. BRAVO
C	INCORPORATED ECN 04039	08/09/13	P. BRAVO
D	INCORPORATED ECN 05329	02/26/16	P. BRAVO

NOTES:

1. MATERIAL: ALUMINUM 7075-T651 PER AMS-QQ-A-250/12
2. FINISH IAW MPP-172 SECTION 3.3 & 4.3.
3. MATERIAL: AISI A2 TOOL STEEL
   CONDITION: ANNEALED
   POST PROCESS: HEAT TREAT TO 58-62 Rc ROCKWELL HARDNESS
4. FINISH: PRIME IAW MPP-172 SECTION 3.3; 1-2 MIL MAX
5. DEBURR AND BREAK ALL SHARP EDGES EXCEPT WHERE OTHERWISE NOTED
6. IDENTIFY IAW MPP-120
7. APPLY F/N 5 AS REQUIRED TO ALL FAYING SURFACES OF F/N 2 UPON ASSEMBLY
8. CUTTING EDGE INTENDED TO BE SHARP, DO NOT BREAK SHARP EDGE
9. ALL DIMENSIONS NOT SPECIFIED ARE CONTROLLED BY 646.9710.

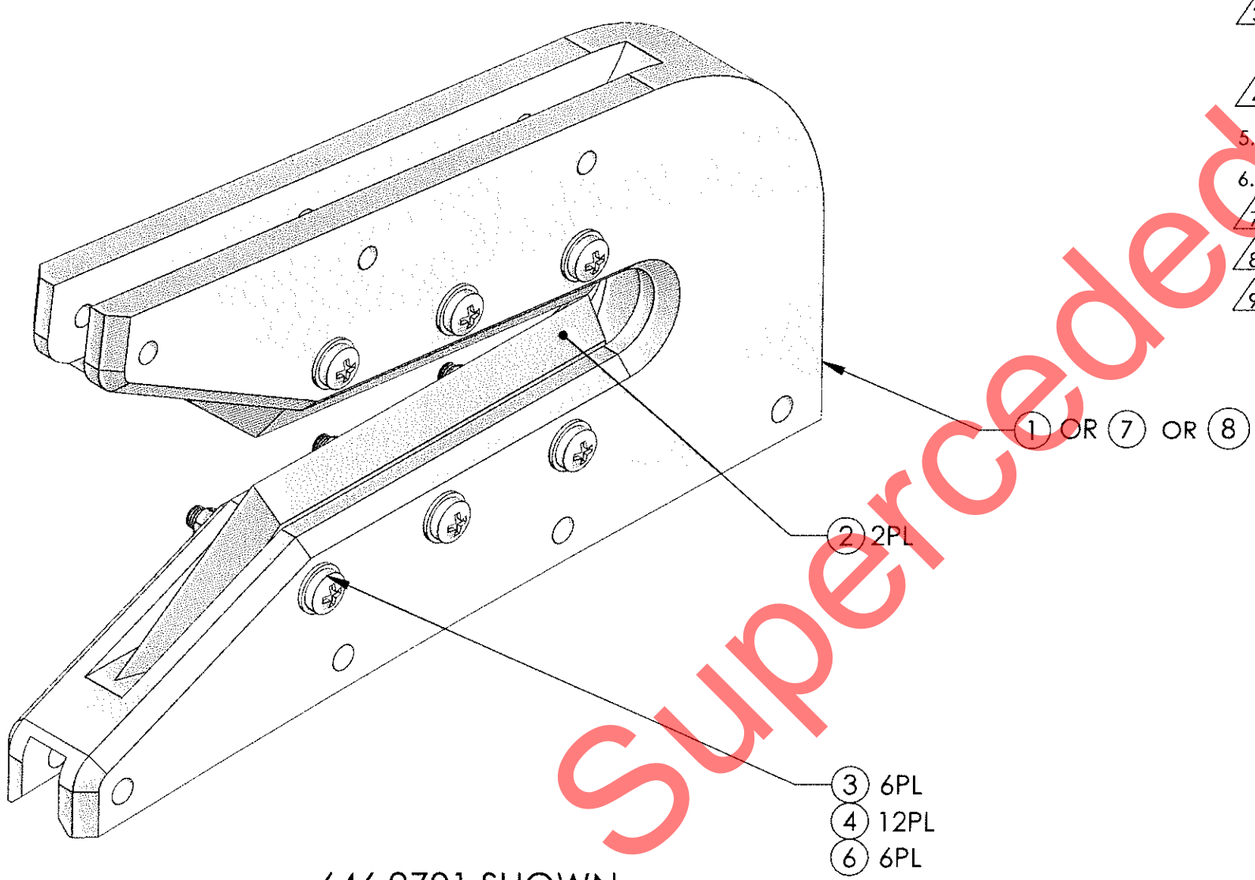

646.9701 SHOWN
646.9702 & 646.9703 TYP

Superceded

UNINCORPORATED ECN(s)

05345

.9703	.9702	.9701	FIND #	PART #	DESCRIPTION	MAT'L	SPEC.
1			8	646.9713	BODY	1	2 9
	1		7	646.9712	BODY	1	2 9
6	6	6	6	601.1541	LOCKNUT	MS21042L08	
A/R	A/R	A/R	5	601.2045	RTV, LOCTITE 598		
12	12	12	4	601.2764	WASHER	NAS1149FN832P	
6	6	6	3	601.2765	SCREW	MS27039-0819	
2	2	2	2	646.9711	BLADE	3	4
		1	1	646.9710	BODY		2
X				646.9703	CUTTER SUB ASSY		
	X			646.9702	CUTTER SUB ASSY		
		X		646.9701	CUTTER SUB ASSY		

QTY — PARTS LIST

NEXT ASSY (S): 646.9600

ORIGINAL DATE (MO-DA-YR): 05-29-09
DRAWN BY: R. ROSANO
CHECKER: P. BRAVO
DRAWING APPROVAL: P. BRAVO 05-29-09
CONTRACT No.

UNLESS OTHERWISE SPECIFIED DIMENSIONS ARE IN INCHES
TOLERANCES ARE:
2 PLACE DECIMALS ±.01
3 PLACE DECIMALS ±.005
ANGLES ± .5°

DART AEROSPACE
APICAL INDUSTRIES, INC. dba DART AEROSPACE
3030 ENTERPRISE CT., SUITE A
VISTA, CA. 92081
(760)-724-5300

CUTTER SUB ASSEMBLY

SIZE	CAGE CODE	DWG. NO.	REV.
B	07M26	646.9700	D

SCALE NONE — SHEET 1 OF 7

THE INFORMATION CONTAINED IN THIS DRAWING IS THE SOLE PROPERTY OF APICAL INDUSTRIES DBA DART AEROSPACE. ANY REPRODUCTION IN PART OR WHOLE WITHOUT THE WRITTEN PERMISSION OF APICAL INDUSTRIES DBA DART AEROSPACE IS PROHIBITED.

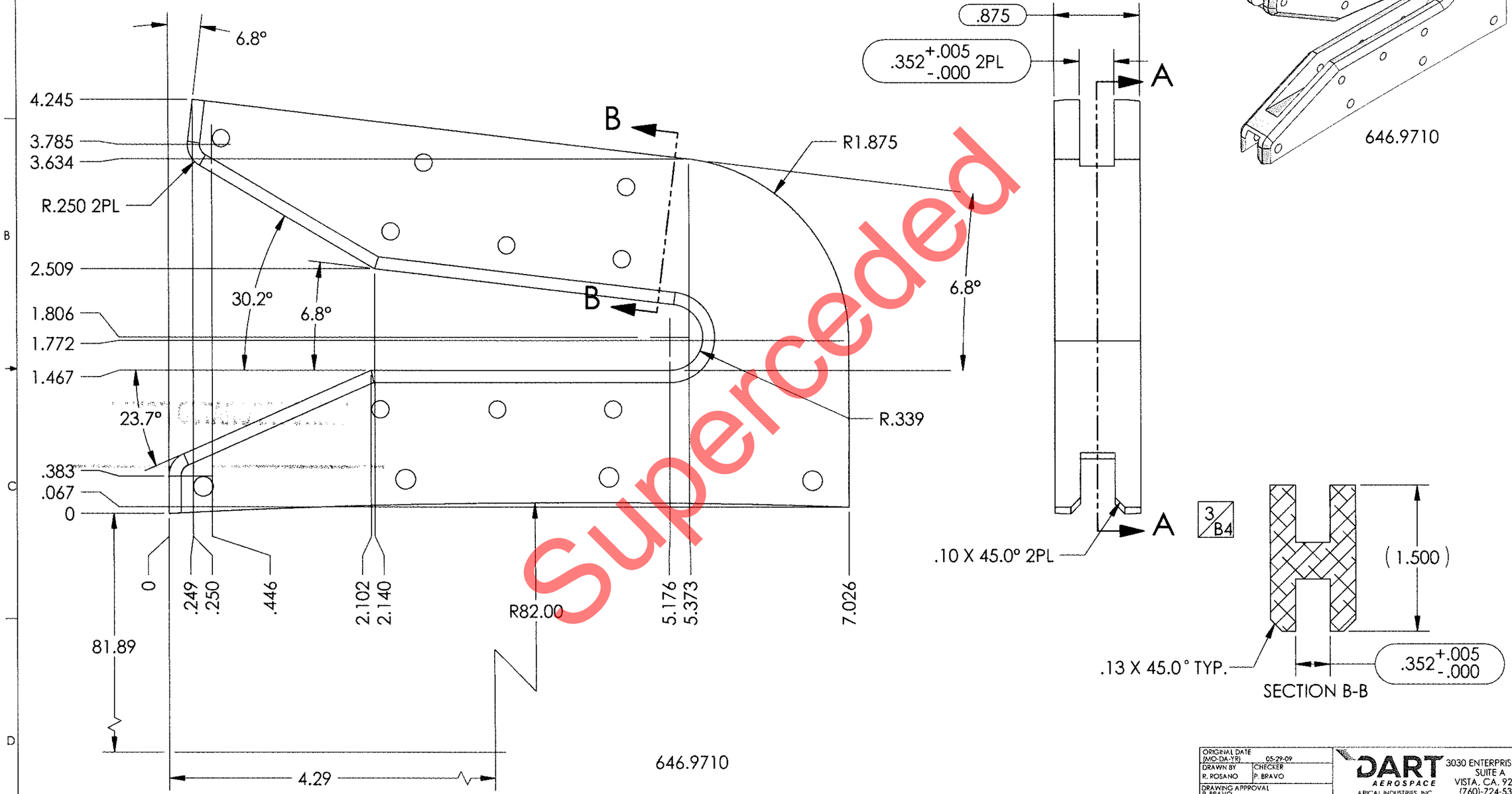

Superceded

ORIGINAL DATE (MO-DA-YR) 05-29-09		DART AEROSPACE
DRAWN BY R. ROSANO	CHECKER P. BRAVO	APICAL INDUSTRIES, INC. dba DART AEROSPACE
DRAWING APPROVAL P. BRAVO 05-29-09		3030 ENTERPRISE CT., SUITE A VISTA, CA. 92081 (760)-724-5300
CONTRACT No.		CUTTER SUB ASSEMBLY
UNLESS OTHERWISE SPECIFIED DIMENSIONS ARE IN INCHES TOLERANCES ARE: 2 PLACE DECIMALS ±.01 3 PLACE DECIMALS ±.005 ANGLES ± .5°		SIZE B · CAGE CODE 07MZ6 · DWG. NO. 646.9700 · REV. D
		SCALE NONE · SHEET 2 OF 7

THE INFORMATION CONTAINED IN THIS DRAWING IS THE SOLE PROPERTY OF APICAL INDUSTRIES DBA DART AEROSPACE. ANY REPRODUCTION IN PART OR WHOLE WITHOUT THE WRITTEN PERMISSION OF APICAL INDUSTRIES DBA DART AEROSPACE IS PROHIBITED.

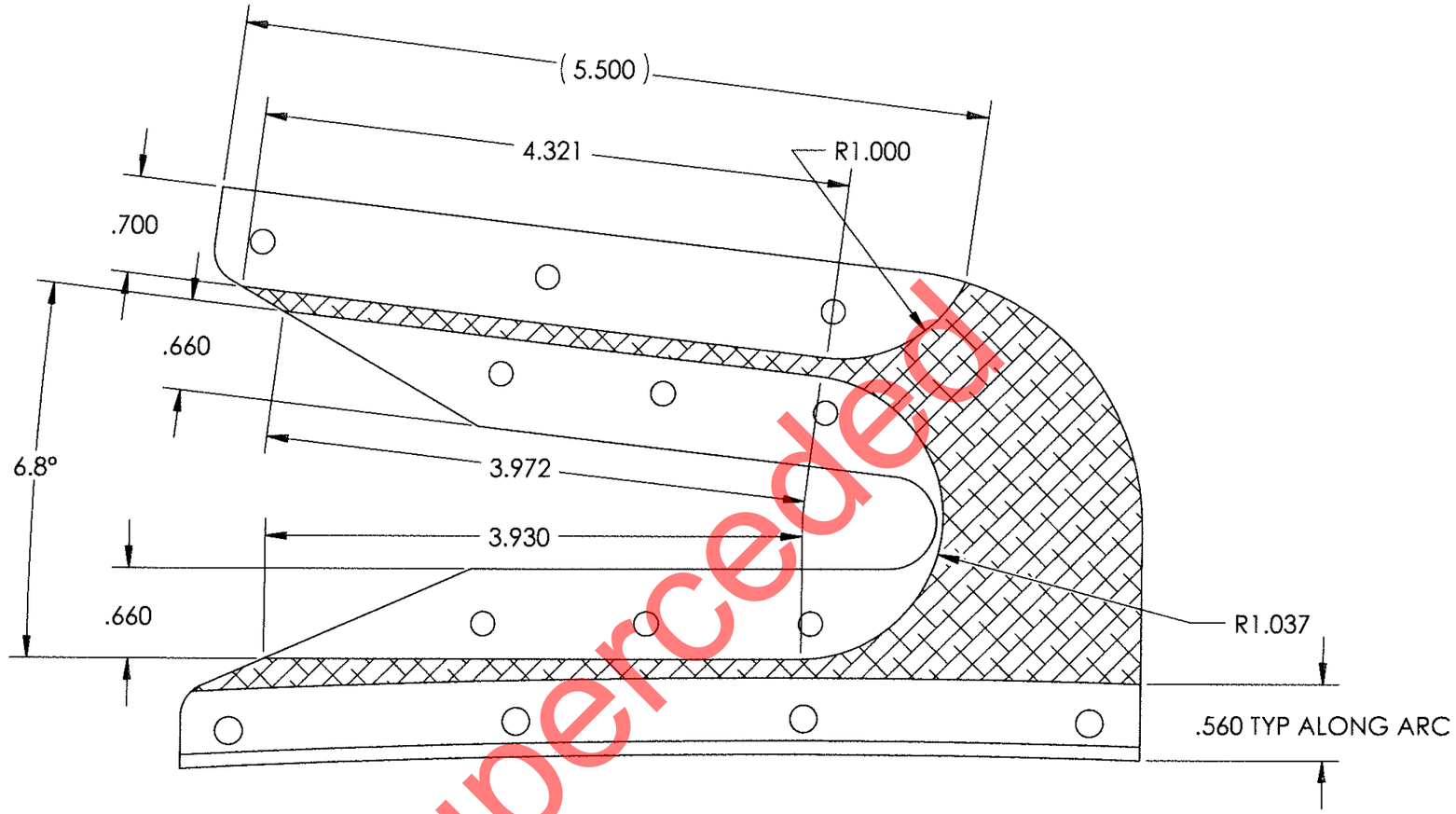

SECTION A-A 2/C6

646.9710

Superceded

ORIGINAL DATE (MO-DA-YR) 05-29-09	
DRAWN BY R. ROSANO	CHECKER P. BRAVO
DRAWING APPROVAL P. BRAVO 05-29-09	
CONTRACT No.	
UNLESS OTHERWISE SPECIFIED DIMENSIONS ARE IN INCHES TOLERANCES ARE: 2 PLACE DECIMALS ±.01 3 PLACE DECIMALS ±.005 ANGLES ± .5°	

DART AEROSPACE
APICAL INDUSTRIES, INC. dba DART AEROSPACE
3030 ENTERPRISE CT., SUITE A
VISTA, CA. 92081
(760)-724-5300

CUTTER SUB ASSEMBLY

SIZE	CAGE CODE	DWG. NO.	REV.
B	07MZ6	646.9700	D

SCALE NONE SHEET 3 OF 7

THE INFORMATION CONTAINED IN THIS DRAWING IS THE SOLE PROPERTY OF APICAL INDUSTRIES DBA DART AEROSPACE. ANY REPRODUCTION IN PART OR WHOLE WITHOUT THE WRITTEN PERMISSION OF APICAL INDUSTRIES DBA DART AEROSPACE IS PROHIBITED.

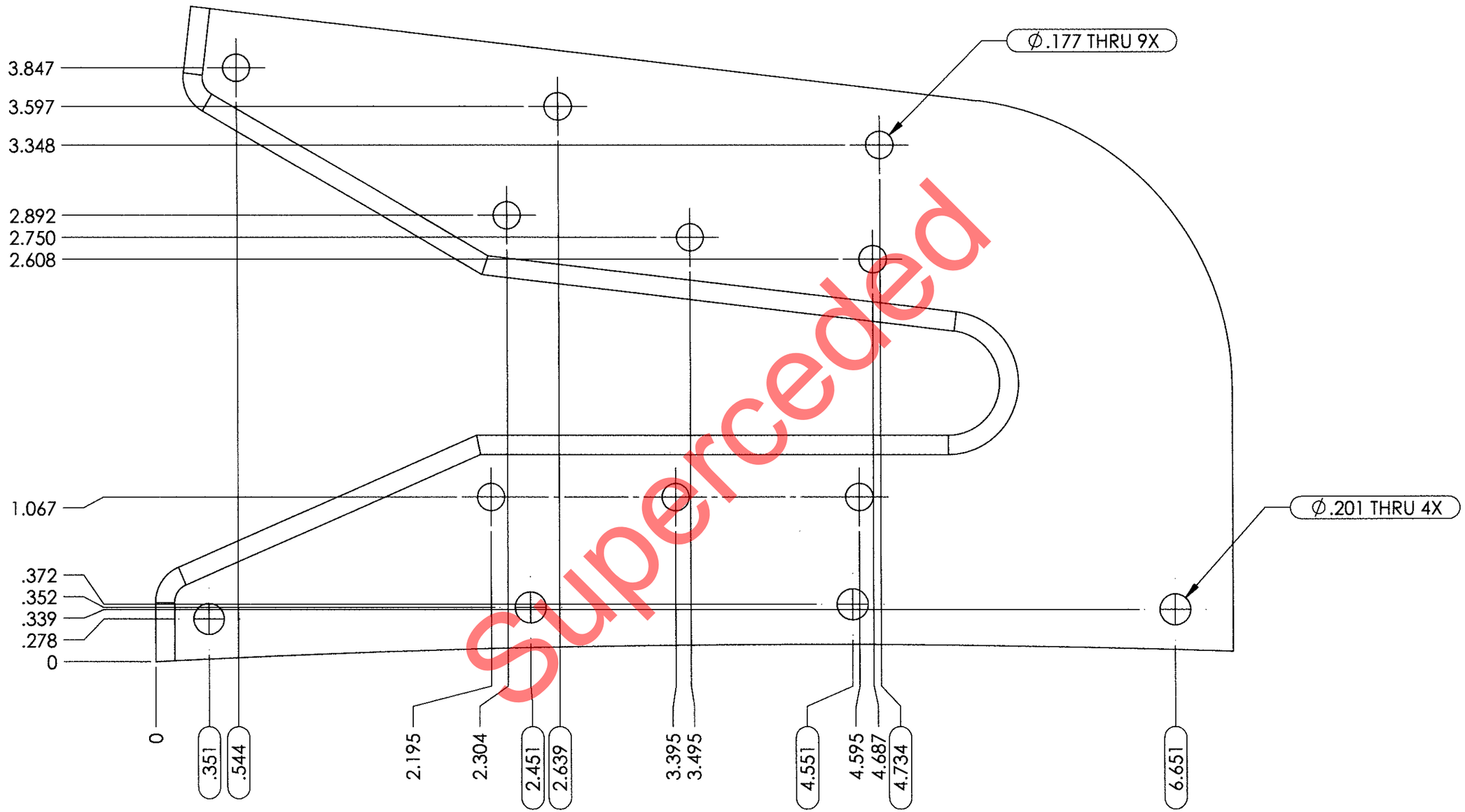

Superceded

HOLE LOCATIONS +/- .002

646.9710

ORIGINAL DATE (MO-DA-YR) 05-29-09	DART AEROSPACE APICAL INDUSTRIES, INC. dba DART AEROSPACE 3030 ENTERPRISE CT., SUITE A VISTA, CA. 92081 (760)-724-5300
DRAWN BY R. ROSANO / CHECKER P. BRAVO	
DRAWING APPROVAL P. BRAVO 05-29-09	
CONTRACT No.	CUTTER SUB ASSEMBLY
UNLESS OTHERWISE SPECIFIED DIMENSIONS ARE IN INCHES TOLERANCES ARE: 2 PLACE DECIMALS ±.01 3 PLACE DECIMALS ±.005 ANGLES ± .5°	SIZE B / CAGE CODE 07MZ6 / DWG. NO. 646.9700 / REV. D
	SCALE NONE / SHEET 4 OF 7

THE INFORMATION CONTAINED IN THIS DRAWING IS THE SOLE PROPERTY OF APICAL INDUSTRIES DBA DART AEROSPACE. ANY REPRODUCTION IN PART OR WHOLE WITHOUT THE WRITTEN PERMISSION OF APICAL INDUSTRIES DBA DART AEROSPACE IS PROHIBITED.

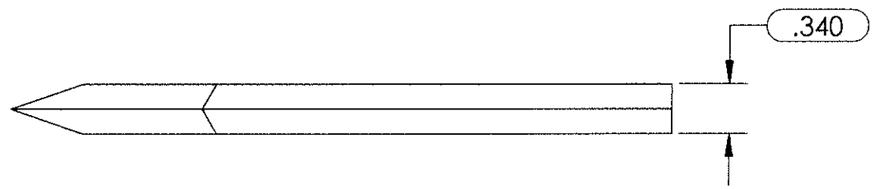

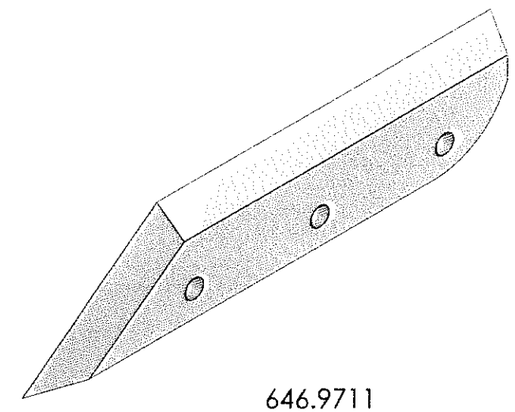

646.9711

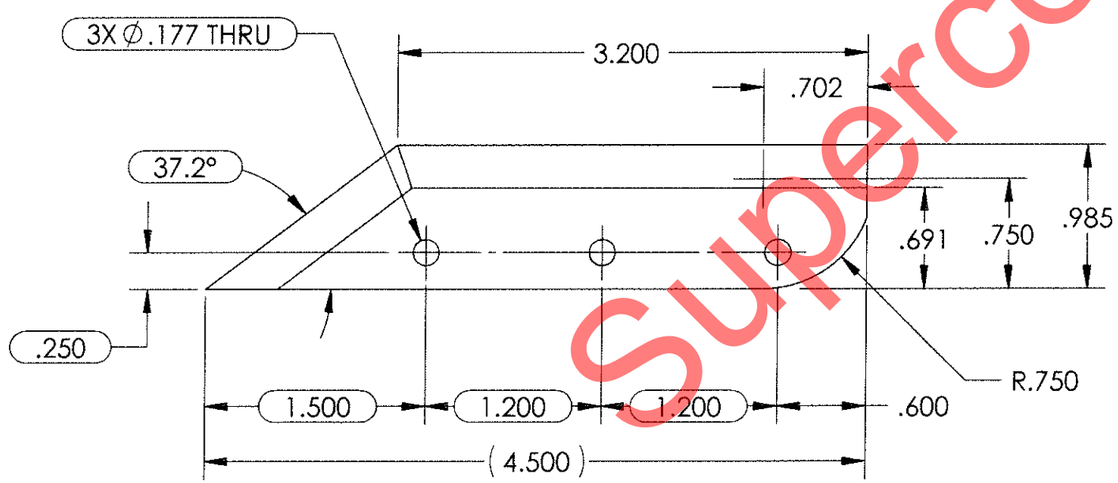

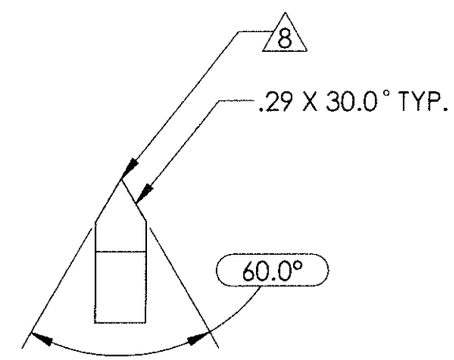

646.9711

Superceded

ORIGINAL DATE (MO-DA-YR) 05-29-09	DART AEROSPACE APICAL INDUSTRIES, INC. dba DART AEROSPACE 3030 ENTERPRISE CT., SUITE A VISTA, CA. 92081 (760)-724-5300
DRAWN BY R. ROSANO / CHECKER P. BRAVO	
DRAWING APPROVAL P. BRAVO 05-29-09	
CONTRACT No.	CUTTER SUB ASSEMBLY
UNLESS OTHERWISE SPECIFIED DIMENSIONS ARE IN INCHES TOLERANCES ARE: 2 PLACE DECIMALS ±.01; 3 PLACE DECIMALS ±.005 ANGLES ± .5°	SIZE B / CAGE CODE 07MZ6 / DWG. NO. 646.9700 / REV. D
	SCALE NONE / SHEET 5 OF 7

THE INFORMATION CONTAINED IN THIS DRAWING IS THE SOLE PROPERTY OF APICAL INDUSTRIES DBA DART AEROSPACE. ANY REPRODUCTION IN PART OR WHOLE WITHOUT THE WRITTEN PERMISSION OF APICAL INDUSTRIES DBA DART AEROSPACE IS PROHIBITED.

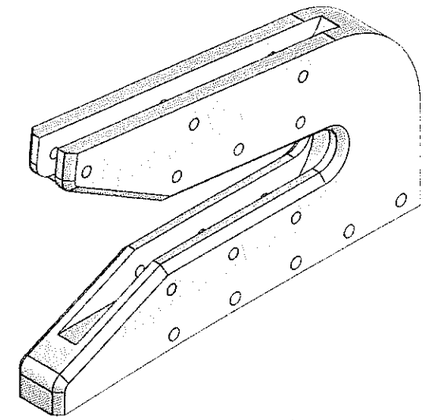

646.9712 9

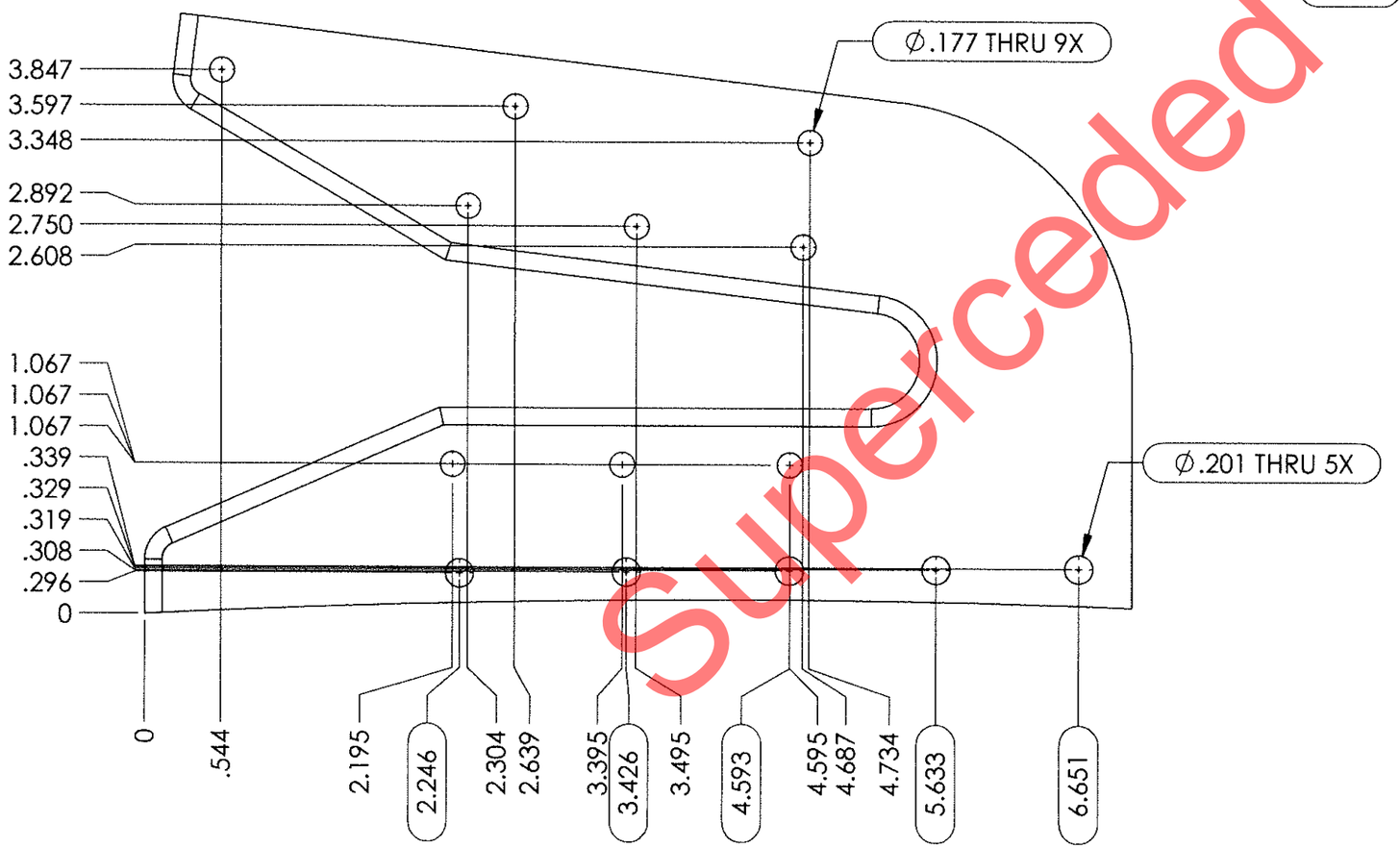

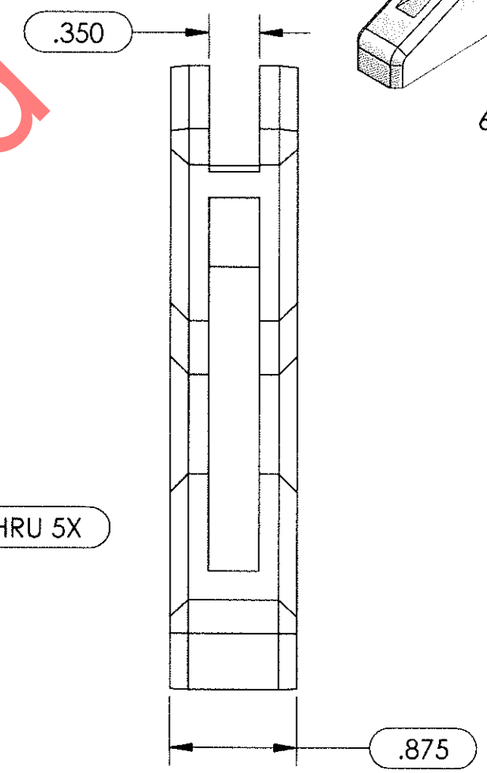

646.9712

Superceded

ORIGINAL DATE (MO-DA-YR) 05-29-09	
DRAWN BY R. ROSANO	CHECKER P. BRAVO
DRAWING APPROVAL P. BRAVO 05-29-09	
CONTRACT No.	

UNLESS OTHERWISE SPECIFIED
DIMENSIONS ARE IN INCHES
TOLERANCES ARE:
2 PLACE DECIMALS ±.01
3 PLACE DECIMALS ±.005
ANGLES ± .5°

DART AEROSPACE
APICAL INDUSTRIES, INC.
dba DART AEROSPACE
3030 ENTERPRISE CT.,
SUITE A
VISTA, CA. 92081
(760)-724-5300

CUTTER SUB ASSEMBLY

SIZE	CAGE CODE	DWG. NO.	REV.
B	07MZ6	646.9700	D

SCALE NONE SHEET 6 OF 7

THE INFORMATION CONTAINED IN THIS DRAWING IS THE SOLE PROPERTY OF APICAL INDUSTRIES DBA DART AEROSPACE. ANY REPRODUCTION IN PART OR WHOLE WITHOUT THE WRITTEN PERMISSION OF APICAL INDUSTRIES DBA DART AEROSPACE IS PROHIBITED.

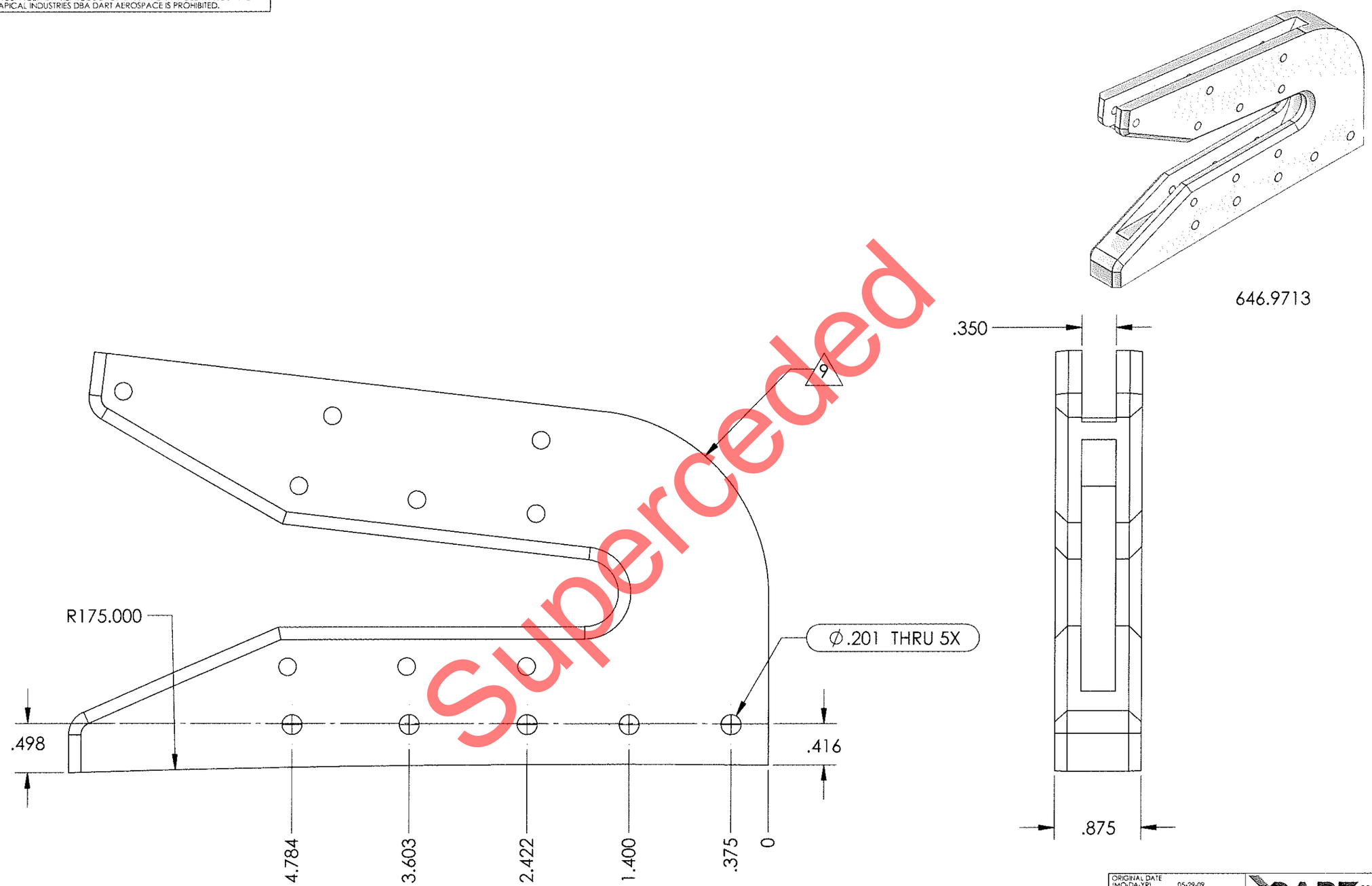

Superceded

ORIGINAL DATE (MO-DA-YR) 05-29-09	DART AEROSPACE APICAL INDUSTRIES, INC. dba DART AEROSPACE 3030 ENTERPRISE CT., SUITE A VISTA, CA. 92081 (760)-724-5300
DRAWN BY R. ROSANO / CHECKER P. BRAVO	
DRAWING APPROVAL P. BRAVO 05-29-09	
CONTRACT No.	CUTTER SUB ASSEMBLY
UNLESS OTHERWISE SPECIFIED DIMENSIONS ARE IN INCHES TOLERANCES ARE: 2 PLACE DECIMALS ±.01 3 PLACE DECIMALS ±.005 ANGLES ± .5°	SIZE B / CAGE CODE 07MZ6 / DWG. NO. 646.9700 / REV. D
	SCALE NONE / SHEET 7 OF 7

Superceded